KARL BAND PLAN

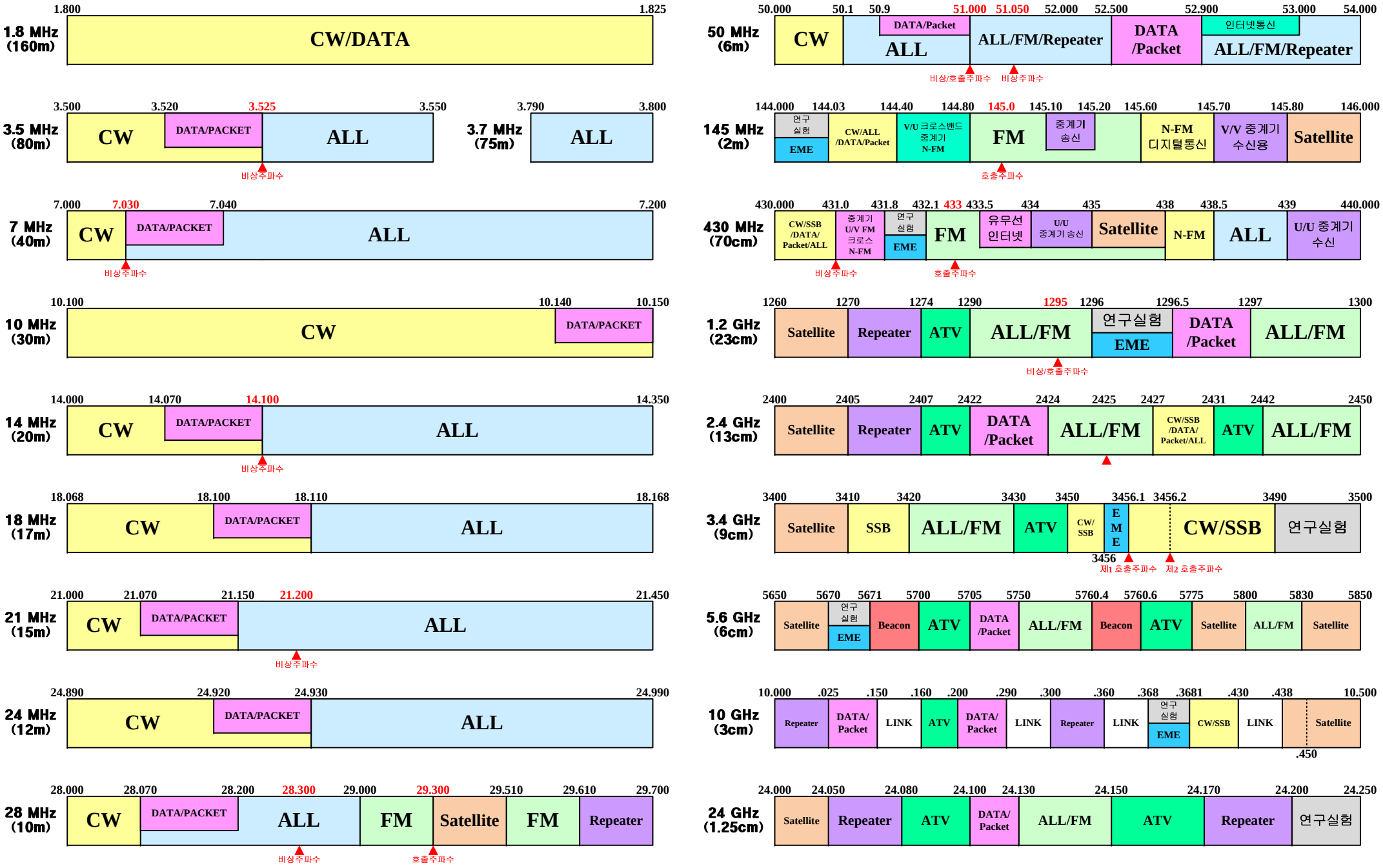

Designed by DS5EVU/2
ds5evu@gmail.com